Rev Ind	Revision	Appd	Date

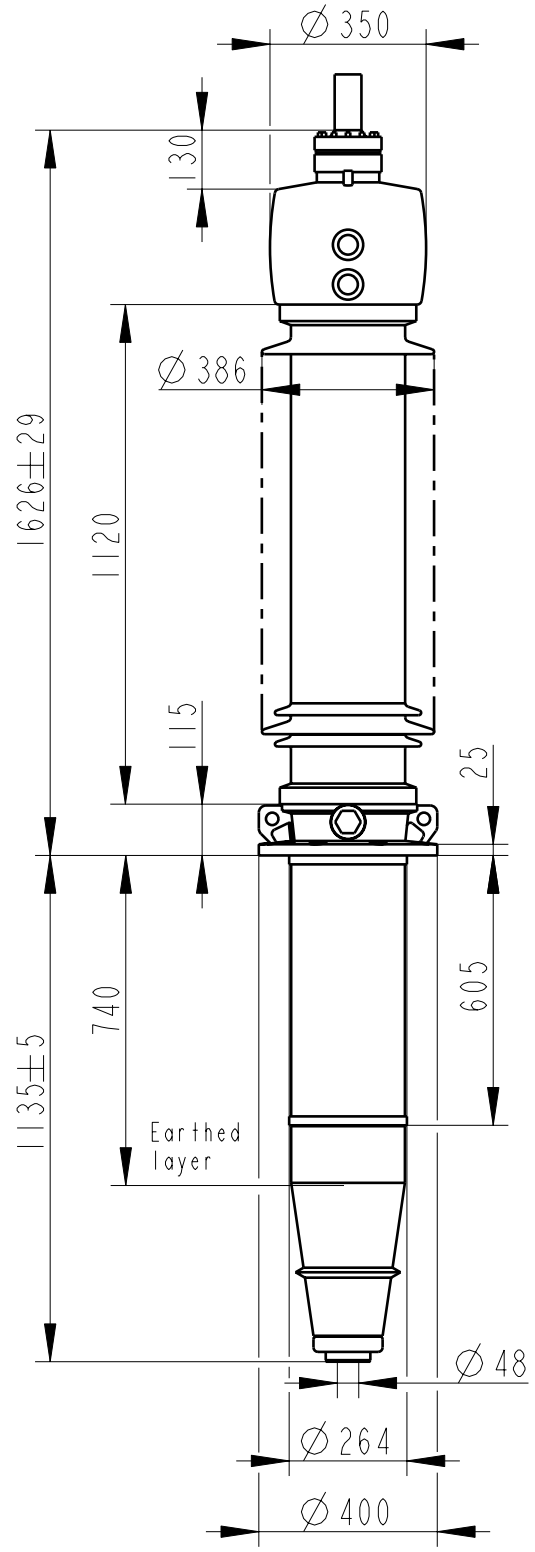

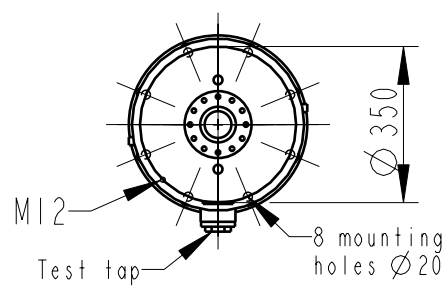

Bushing Data:

Rated Voltage	170	kV
Phase to-earth Voltage	123	kV
Dry Lightning Impulse 1,2/50µs	550	kV
Wet Switching Impulse	400	kV
Wet Power frequence AC	240	kV
Routine test 1min dry 50Hz	260	kV
Rated Current	3150	A
Creepage Distance	3355	mm
Mass	305	kg

Ordering Data:

BUSHING COLOUR AIR INSULATOR
LF121058 -A / -AA BROWN / LIGHT GREY

OUTER TERMINAL

	H2 (mm)	D2 (mm)
LF170 073-A Al	125	60
LF170 073-B Cu	125	60
LF170 073-G Cu/Ag	125	60

OTHER TYPES ON REQUEST

END-SHIELD
LF170 046-U EPOXY INSULATED
LF170 046-UP INSULATED WITH 3 mm PRESSBOARD

DRAW ROD SYSTEM
LF170 059 LOWER DRAW ROD WITH N1=4 OR N1=6
LF170 057 UPPER DRAW ROD

INNER TERMINAL

	D3 (mm)	D9 (mm)	Cond.area (mm2)	Current (A) IEC	IEEE
LF170 056-E	0 *)	45	-	-	-
LF170 056-D	40	45	600	1600	1360

*) WITH PILOT HOLE D=5

ABB Components Ludvika, Sweden

No.
Ur/Uy kV Ir A 50/60 Hz
LI kV SI kV AC kV
M kg L mm D
C1 pF Tanδ %
C2 pF Tanδ %

INNER TERMINAL / OUTER TERMINAL

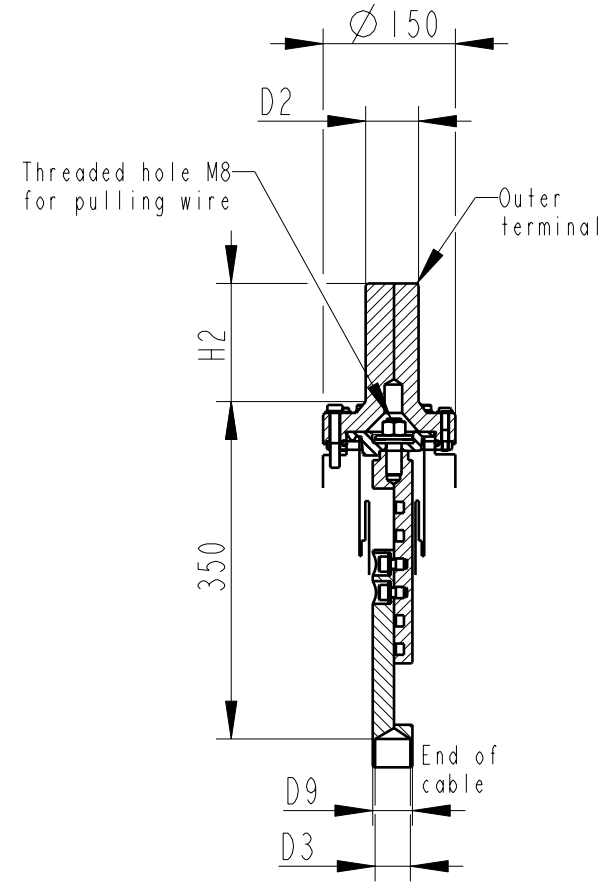

END SHIELD

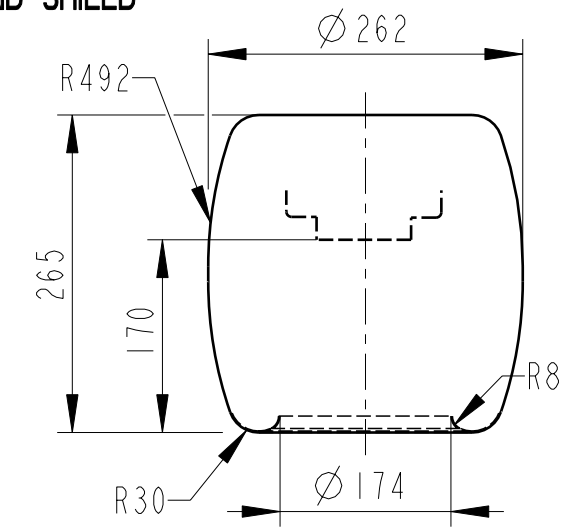

DRAW ROD SYSTEM / OUTER TERMINAL

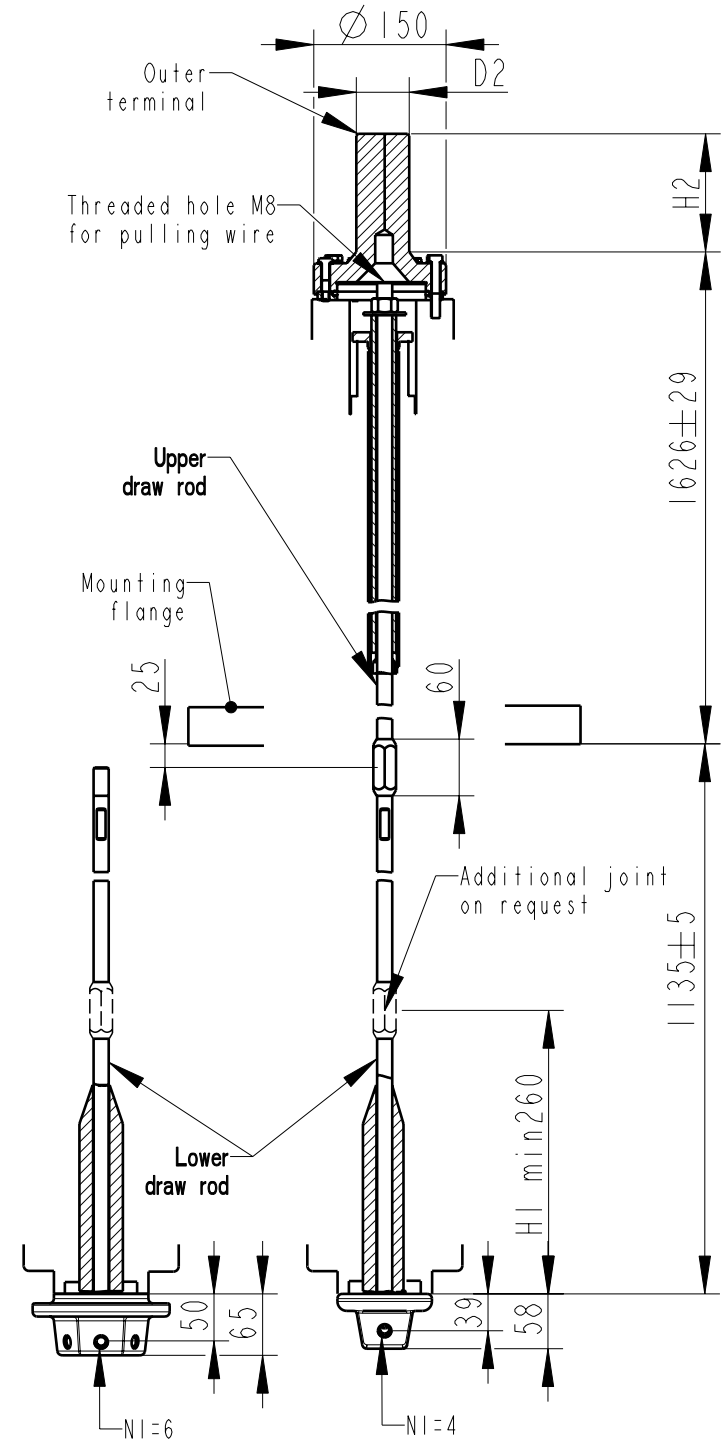

N1=Number of holes M12, equipped with thread insert with screw lock, depth 20, for cable lugs.

Based on	Reg. No.	Title	
Prepared: Lövnord	Responsible department: COM/BK 0022	GOE-550-400-3150-0.6	
Approved: Johansson	Take over department		Language: 82
Design engineering review: Gutman	Database		Page: 1(1)
ABB Components		Document No. 2751369-64	

We reserve all rights in this document and in the information contained therein. Reproduction, use or disclosure to third parties without express authority is strictly forbidden. ©ABB